GLOBAL PX

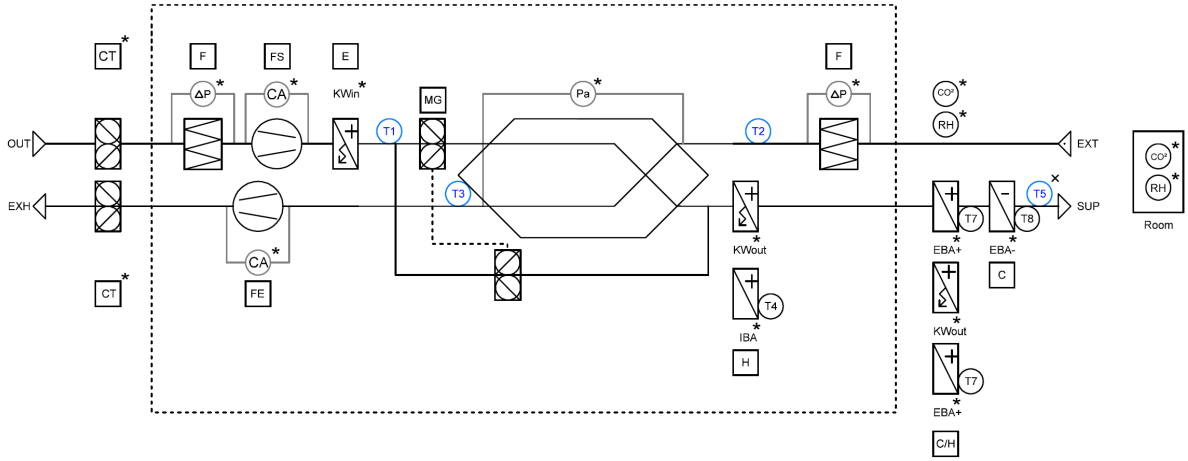

Component		Delivery
FE	Exhaust fan with EC drive	installed / wired / configured
FS	Supply fan with EC drive	installed / wired / configured
CT*	Motorised damper CT	installed / wired / configured
H*	Heating	
	KWin* : Electrical coil "frost protection"	installed / wired / configured
	KWout* : Electrical post-heating coil	installed / wired / configured
	IBA* : Internal Water Heating coil	installed / wired / configured
	3-way valve, Valve actuator	separately
F	Filter OUT ePM1 50% (F7) / EXT ePM10 50% (M5)	installed
C/H*	Heating / Cooling	
	IBA+* : Heating coil	separately
	KW* : Electric heating	separately
	EBA+/- *: Change over coil	separately
C*	Cooling	
	EBA-* : Cooling coil	separately
		separately
T1	Outdoor temp.	installed / wired / configured
T2	Extract temp.	installed / wired / configured
T3	Exhaust temp.	
T5	Supply temp. (separately)	
T4	Frost protection temp.	installed / wired / configured
T7	Frost protection temp.	separately
T8	Frost protection temp.	separately
CO²* RH*	Sensors CO², Humidity	separately
CA*	Constant airflow kit	installed / wired / configured
ΔP*	Pressure switch	separately
Pa*	Pressure sensor	installed / wired / configured

*: Option

Changes			Name	Date
Name	Date	Draw.:	Beckers	10.10.2018
		check.:		
		Norm:		
Subject:	GLOBAL_Fow chart_EN.spl7			GLOBAL PX

T 0320 - 28 61 81 | **www.auerhaan-klimaattechniek.nl**
Als het om lucht gaat.
AUERHAAN KLIMAATTECHNIEK